30-53
Clamping lever for clamping elements

NovoNox
Inox Components

Item description/product images

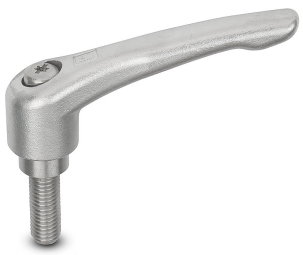

Description

Note:
This clamping lever is suitable for clamping elements.

Drawings

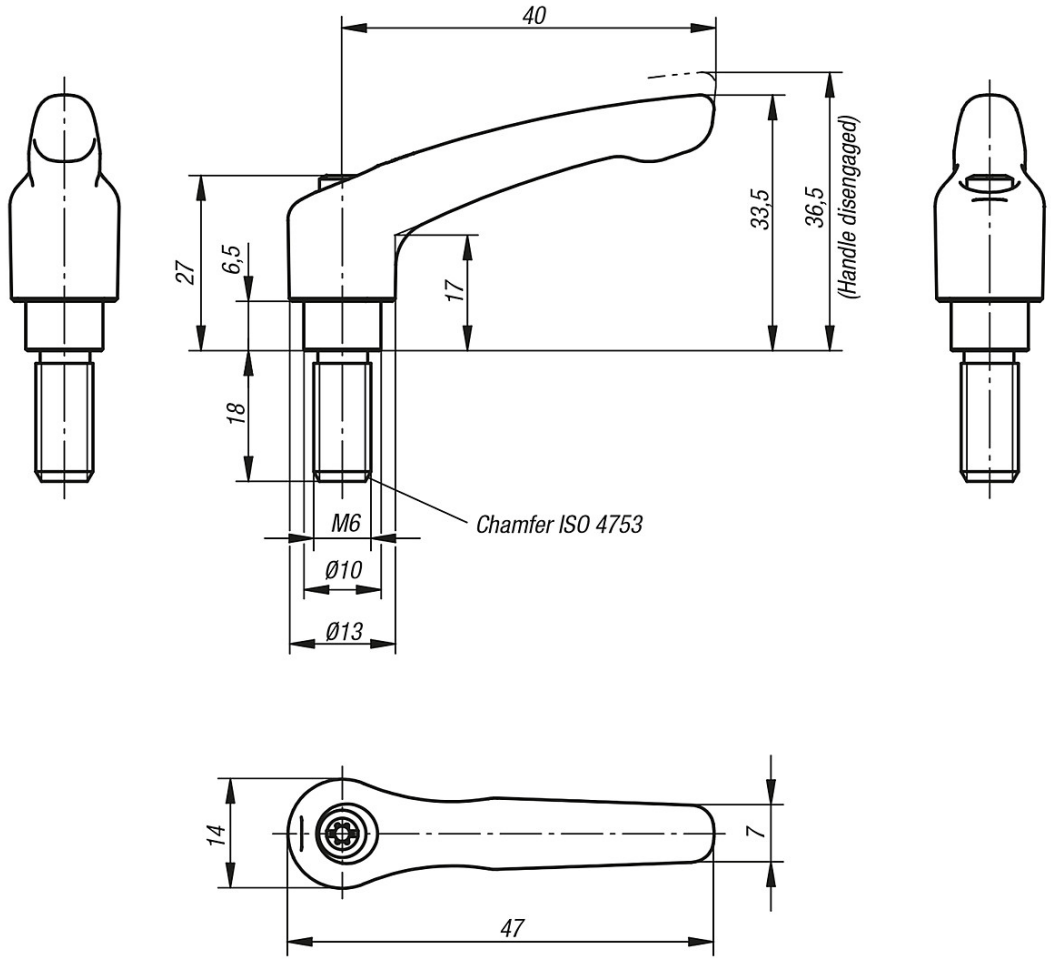

Overview of items

Order No.	Suitable for
30-53-9000	Clamping elements