Visit our website!
www.millerleaman.com

URGENT!

TO: Sales Department

MILLER-LEAMAN, INC.
Manufacturer of the
THOMPSON
SeaStrainer

# Fast Fax- Thompson SeaStrainer

Fill out this fact form and your questions will be responded to by an application specialist ASAP. Fax this form to:

(386) 248-3033

Or, call us at 1-800-881-0320 for immediate assistance.

## APPLICATION FACTS:

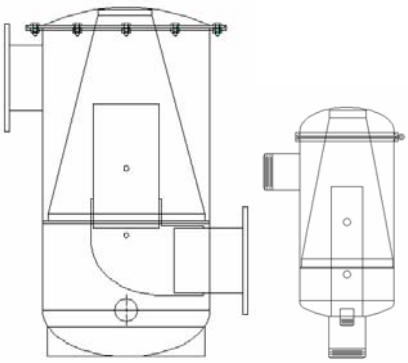

Liquid:_____ Temperature:_____

Flow Rate:_____ Line Size:_____

Operating Pressure:_____ Max Pressure:_____

Screen Size Required:_____ Perforated _____ Mesh

Describe the particle (firm, soft, slimy, etc.)_____

Is there a filter/strainer currently being used on this application? If so, what product is being used and how is it performing?_____

Why is filtration required? _____

What are the space limitations? _____

_____

Name_____ Title_____

Company_____ Phone_____

Address_____

City_____ State_____

Zip_____

MILLER LEAMAN INC

800 Orange Ave. · Daytona Beach, FL 32114
tel: 386.248.0500 · toll free: 800.881.0320
fax: 386.248.3033 · www.millerleaman.com

PLEASE VISIT OUR WEB SITE AT WWW.MILLERLEAMAN.COM